BEST QUALITY
BEST SELLER

Aaron

170

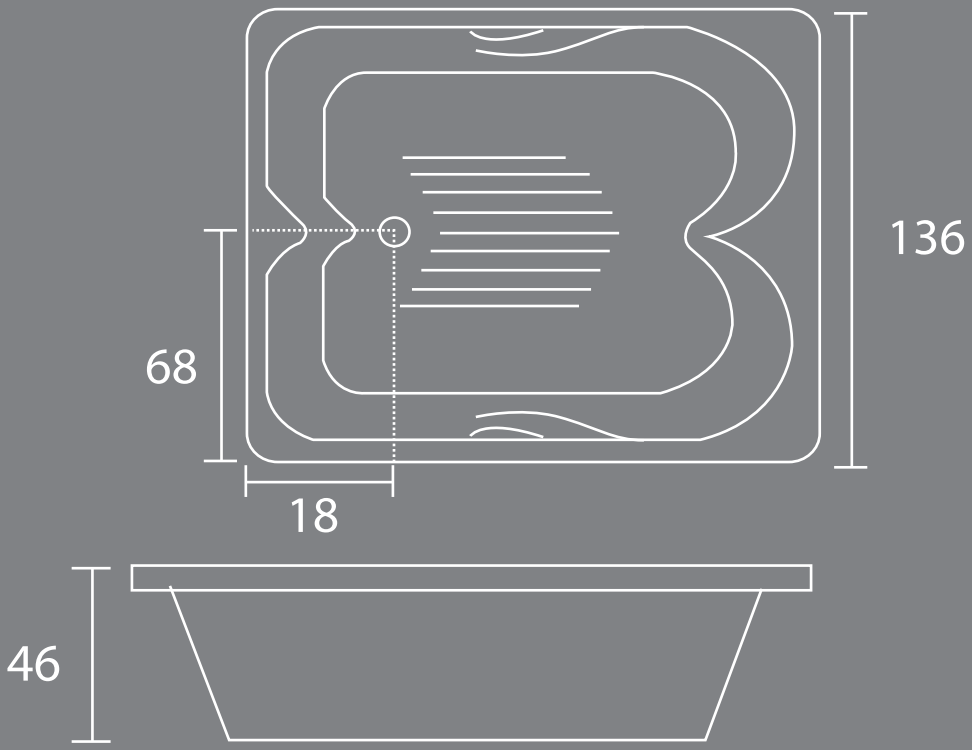

Type : Aaron
Size : 170 x 136 x 46
Material : Acrylic/Marble/Onyx